CASE CONSTRUCTION

GR925

MECHANICAL / EH CONTROLS

MOTOR GRADER

TIER 4 FINAL CERTIFIED

ENGINE

Model	Cummins B6.7
Emissions level	EPA Tier 4 Final / EU Stage 5
Number of cylinders	6
Displacement	409 in³ (6.7 L)
Horsepower @ 1,800 RPM:	Net 240 hp (179 kW)
Maximum torque @ 1,500 RPM:	850 ft·lb (1 152 Nm)

DRIVETRAIN

Loading - front axle:
4WD 11,325 lb (5 137 kg)
AWD 11,872 lb (5 385 kg)

Loading - rear axle/tandem:
4WD 29,485 lb (13 374 kg)
AWD 30,459 lb (13 816 kg)

Travel speeds:

	Forward mph (kph)	Reverse mph (kph)
1st	3 (5.1)	3 (5.5)
2nd	5 (7.9)	9 (13.8)
3rd	8 (13.1)	20 (32.6)
4th	12 (20.1)	–
5th	19 (30.9)	–
6th	28 (45)	–
D	0–28 (0–45)	0–20 (0–32.6)
Top speed:	28 (45)	20 (32.6)

DRIVETRAIN

Manufacturer and model	ZF 6WG210
Transmission	Automatic Powershift
Number of speeds - forward	6
Number of speeds - reverse	3

Front axle:
Heavy-duty welded fabrication with integrated lean bar lock.

Final drive:
Inboard-mounted planetary sealed in cooled, filtered oil.

Brakes:
Foot-controlled, hydraulically operated, multiple wet-disc brakes sealed in pressurized, cooled, filtered oil. Both independent systems effective on all 4 tandem wheels.

Primary and secondary brakes:
Hydraulically actuated, inboard of tandem pivot, self-adjusting, sealed in cooled and filtered oil, multi-disc (ISO 3450 compliant).

Park brake:
Automatically spring applied, hydraulically released disc brake (ISO 3450 compliant).

Front axle	High strength, welded steel
Oscillation	32° each direction
Wheel lean	20° left/right

Differential:
Spiral bevel gear system, hydraulically actuated with a clutch-type mechanism, allowing differential lock engagement while the machine is in motion. It can be applied in both manual and automatic differential lock modes.

Tandem axle oscillation	30˚ (Total)

Steering:
Hydraulic frame articulation for maneuverability and productivity, crab steering reduces side drift, positions tandems on firm ground and increases side-slope stability.

Tire size - standard	17.5R25
Service brake type	Multiple wet discs
Service brake actuation	Hydraulic
Ground clearance front axle	21.5 in (546 mm)

HYDRAULICS

Type	Variable displacement axial piston pump
Pump displacement	100 cc / rev
Pump flow	58 gpm (220 L / min)
Relief pressure	2,750 psi (18 961 kPa)

OPERATOR ENVIRONMENT

ROPS/FOPS certified (ISO 3471, ISO 3449) heated, Air conditioned and defrosted; 7 in Multifunction color display screen with machine usage reports, Fault codes and alarms; Push button start ignition; Dual side cab access; Adjustable operator's console and controls, steering wheel; Air suspension seat with seat belt and adjustable armrests; Dome light; Heated exterior rearview mirrors; Front and rear backup camera with dedicated display screen, Sliding side window, Cup holder; cooler storage box; USB outlet; Bluetooth® radio; Steps – left/right; Front and rear windshield wiper; Front and rear windshield washer; Rear window defroster.

The ventilation system circulates both outside and inside air through filters for a clean working environment. Built in defroster vents direct air flow for effective window de-fogging/de-icing.

OPERATING WEIGHT

14 ft moldboard, 17.5R25 Michelin XTLA tires, push block, and rear ripper with 5 teeth:

4WD	46,934 lb (21 289 kg)
AWD	48,455 lb (21 979 kg)
Weight, front axle:	
4WD	13,455 lb (6 103 kg)
AWD	14,002 lb (6 351 kg)
Weight, rear axle:	
4WD	33,479 lb (15 186 kg)
AWD	34,454 lb (15 628 kg)

CIRCLE

Circle side shift	31 in (789 mm)
Frame circle diameter	59 in (1 500 mm)

Circle drive:
Hydraulic geroler motor driving a reduction worm box with overload wetplate clutch.

Protected circle drive:
Sealed and lubricated slewing bearing, requiring no adjustment. Mounted between the drawbar and circleframe, which are welded and machined structures.

Circle rotation	360˚
Steering angle	48˚
Turning radius - minimum	23 ft 8 in (7.22 m)
Frame articulation (each way)	22˚

SERVICE CAPACITIES

Fuel tank (refilling cap)	106 gal (400 L)
Hydraulic tank (refilling cap)	18 gal (68.75 L)
Cooling system	9.5 gal (36 L)
Engine oil with filter	4 gal (15.2 L)
Transmission fluid	8.7 gal (33 L)
Axle	8.5 gal (32 L)
Tandem housing (each side)	19.8 gal (75 L)
Circle gearbox	1.3 gal (5 L)

MOLDBOARD

High strength welded construction, using wear resistant high carbon steel materials. Underlays/overlays and cutting edges can be exchanged left to right. Moldboard bronze guides are easily replaceable and adjustable for precision.

Width - moldboard	14 ft (4 270 mm)
Height - moldboard	27 in (686 mm)
Thickness - moldboard combination	7.8/9.8 in (20/25 mm)
Moldboard sideshift - right	27 in (685.5 mm)
Moldboard sideshift - left	27 in (685.5 mm)
Shoulder reach	7 ft 6 in (2 287 mm)
Hydraulic blade tip - forward	42°
Hydraulic blade tip - rearward	5°
Moldboard - lift above ground	19.3 in (490 mm)
Moldboard - arc radius	16.8 in (426 mm)
Bank angle	90°

Blade pull at maximum operating weight:

4WD	32,331 lb (14 665 kg)
AWD	45,239 lb (20 520 kg)

CUTTING EDGE

Thickness	0.7 in (19 mm)
Width	8 in (203 mm)

ELECTRICAL

System voltage	24V
Number of batteries	2
Battery capacity	1,350 CCA
Alternator	120 amp
Number of LED worklights	8
Number of engine bay lights	3

Turn signal lights (front & rear)

ALL WHEEL DRIVE OPTION

Front wheel drive	
Hydrostatic drive: Variable displacement pumps with auto shifting 2 speed motors.	
Independent left and right hydraulic circuits.	
Freewheeling mode: Engages automatically when system is inactive for improved efficiency.	
Inching mode for fine, slow speed maneuvering.	
Precision mode	Front wheel only drive
Pumps	Danfoss
Pump displacement	3.2 in^3 (53 cm^3)
Front wheel motors	Poclain
Motor displacement	137 in^3 (2 238 cm^3)
Reduction	None
AWD max speed	19 mph (30 kph)
Precision mode max speed	6 mph (10 kph)

REAR RIPPER

Description:
Parallel linkage, with maintenance free bearings, hydraulic float and integrated tow hitch.

Width of cut:

Ripper	7 ft 6 in (2 300 mm)

Max number of shanks/teeth:

Ripper	5

Lift above ground:

Ripper	25.4 in (645 mm)

Maximum depth:

Ripper	14.6 in (370 mm)

Shank size:

Ripper	2.3 × 5.3 in (58 × 137 mm)

MID MOUNT SCARIFIER

Type:
Radial arm linkage with maintenance free bearings, and hydraulic float. V-type scarifier beam with 3 pitch angle positions.

Width of cut	46.8 in (1 188 mm)
Maximum number of shanks/teeth	11
Lift above ground	11.8 in (300 mm)
Max depth	9.5 in (241 mm)
Shank spacing	4.5 in (114 mm)
Shank size	1 × 3.1 in (27.5 × 78 mm)

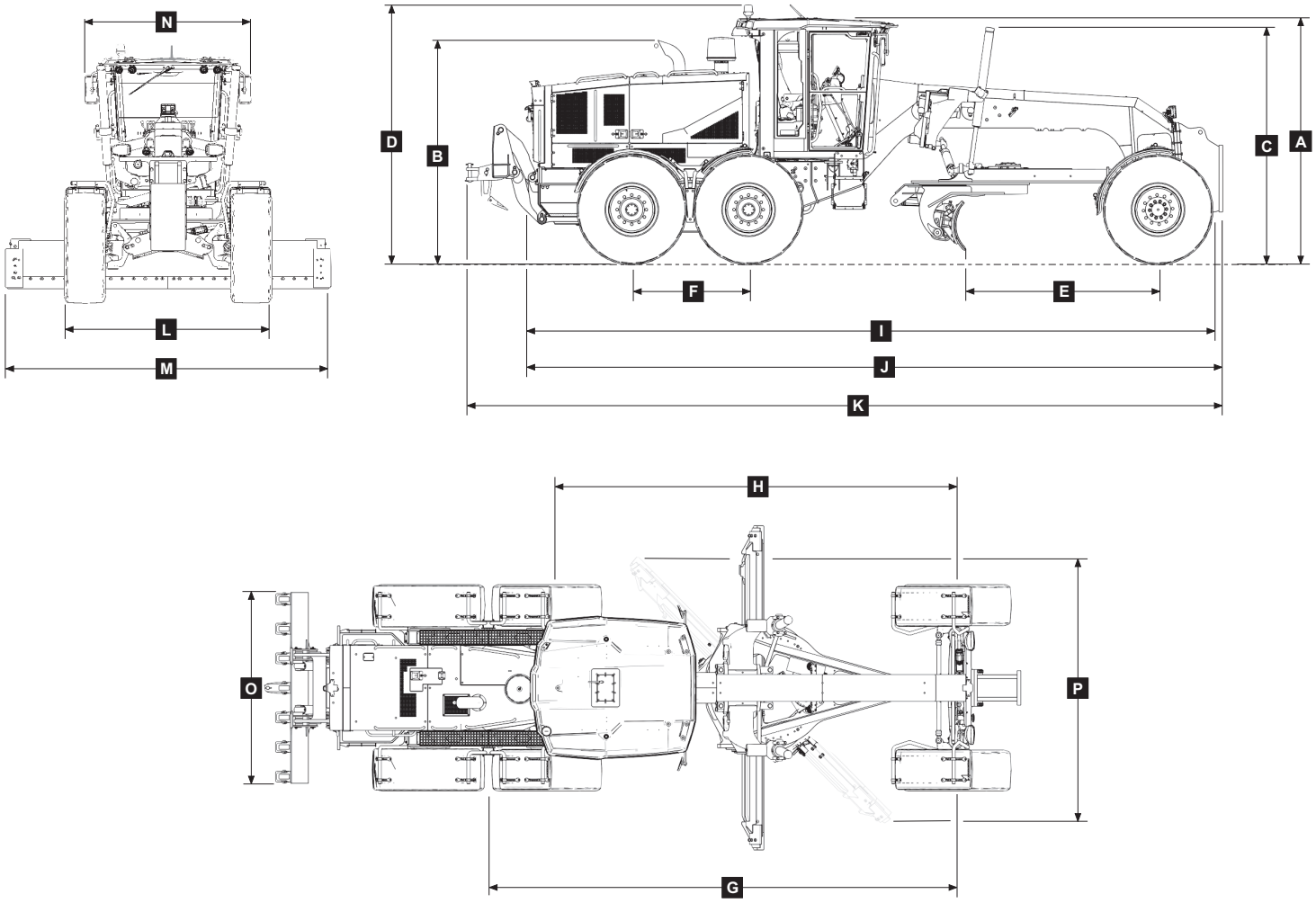

Line drawings are for illustrative purpose only and may not be exact representation of unit.

DIMENSIONS

A.	Height to top of cab	10 ft 4 in (3 161 mm)
B.	Height - exhaust	9 ft 5 in (2 861 mm)
C.	Height - blade lift cylinders	9 ft 9 in (2 974 mm)
D.	Height - beacon light	10 ft 11 in (3 333 mm)
E.	Front axle center to blade	8 ft 6 in (2 580 mm)
F.	Tandem axle wheel centers	5 ft 2 in (1 567 mm)
G.	Front axle center to tandem axle pivot	20 ft 7 in (6 272 mm)
H.	Front axle center to artic center	17 ft 8 in (5 392 mm)
I.	Length - overall without pushblock and ripper	30 ft 1 in (9 165 mm)
J.	Length - overall with pushblock	30 ft 8 in (9 353 mm)
K.	Length - overall with pushblock and ripper	33 ft 3 in (10 138 mm)
L.	Width over 17.5R25 tires	8 ft 8 in (2 634 mm)
M.	Width over blade - 14 ft moldboard	14 ft (4 273 mm)
N.	Width over mirrors - operating position	7 ft 3 in (2 212 mm)
O.	Width over ripper	7 ft 7 in (2 300 mm)
P.	Width transport position - 14 ft blade	9 ft 9 in (2 970 mm)

STANDARD EQUIPMENT

OPERATOR ENVIRONMENT

ROPS/FOPS certified
Deluxe cab with HVAC
Bluetooth radio
Heated air suspension seat
Mechanical control levers
Push button Ignition start
Selectable operator code
Economy (ECO) mode
Sealed switch module (SSM)
Sealed display controller (SDC)
Machine presets
Hydraulics lock switch
Emergency stop button
Diagnostics port

ENGINE

Cummins B6.7 Engine
Selective catalytic reduction (SCR)
Diesel particulate filter (DPF)
Block heater

MOLDBOARDS / CIRCLE

14 ft × 27 in (4 270 × 686 mm)
Protected circle with sealed slew bearing
Slip clutch

TIRES

17.5R25 Michelin XTLA

ELECTRICAL

Rear and front cameras
Reverse backup alarm
LED worklights and headlights
Engine bay lights
Rotating beacon light
Rear mounted cooling module with hydraulically driven reversing fan
(2) 12V batteries (1,350 CCA)
Battery jump start terminal
Battery electrical disconnect switch

HYDRAULICS

Left-hand side controls: Blade and machine Controls, ripper controls and 1 auxiliary controls
Right-hand side controls: Blade and machine controls, mid scarifier controls and 3 auxiliary controls

DRIVETRAIN

6-Speed Powershift Transmission
Auto speed control
Tandem drive system (4 wheel drive)
Automatic/Manual differential lock
Inboard planetary axles
Transmission oil cooler
Hydraulic wet disc brakes
Spring-applied hydraulic release parking brake

OTHER

Rear and front fenders
Tow hitch
MyCASEConstruction Telematics Includes hardware and up to 7-year data subscription

OPTIONAL EQUIPMENT

OPERATOR ENVIRONMENT

Cab air precleaner
AWD selection controller
Rear window heating
Electro-Hydraulic (EH) Controls
- Joystick steering
- Auto articulate function
- Auto blade control

MOLDBOARDS

14 ft × 24 in (4 270 × 610 mm)
Reverse overlay end bits
Blade impact absorption system

HYDRAULICS

Left-hand side controls: Blade and machine controls, ripper controls and 2 auxiliary controls
Right-hand side controls: Blade and machine controls, mid scarifier controls and 4 auxiliary controls

ATTACHMENTS

Rear ripper - 5 shanks
Mid mount scarifier

DRIVETRAIN

All wheel drive (AWD)
Precision Mode (AWD) front wheel speed adjustment
Inching pedal/Inching mode (AWD)

OTHER

Various tires available (including snow tires)
Engine air intake extension
Front push block

CaseCE.com

©2026 CNH Industrial America LLC. All rights reserved. CASE is a trademark registered in the United States and many other countries, owned by or licensed to CNH Industrial N.V., its subsidiaries or affiliates. CNH Industrial Capital is a trademark in the United States and many other countries, owned by or licensed to CNH Industrial N.V., its subsidiaries or affiliates. Printed in U.S.A. Contains 10% post-consumer fiber.

IMPORTANT: CASE Construction Equipment Inc. reserves the right to change these specifications without notice and without incurring any obligation relating to such change. Availability of some models and equipment builds vary according to the country in which the equipment is used. The illustrations and text may include optional equipment and accessories and may not include all standard equipment. Your CASE dealer/distributor will be able to give you details of the products and their specifications available in your area.

Biodiesel Ready

CASE Construction Equipment is biodiesel-friendly. NOTE: All engines meet current EPA emissions regulations. All specifications are stated in accordance with SAE Standards or Recommended Practices, where applicable.

SAFETY™ NEVER HURTS

Always read the Operator's Manual before operating any equipment. Inspect equipment before using it, and be sure it is operating properly. Follow the product safety signs and use any safety features provided.

Form No. CCE202610GR925
Replaces Form No. CCE202609GR925