CX14D

MINI EXCAVATORS
D-Series



Engine D722
Engine power 8.8 kW - 11.8 hp
Operating weight 1360 kg

SPECIFICATIONS
CX14D

ENGINE
Type _____ KUBOTA D722 - STAGE 5
Max. Power (2200 rpm) (kW / hp) _____ 8.8 - 11.8
Displacement (cm³) _____ 719
Number of cylinders (n°) _____ 3
Cooling _____ Liquid
Consumption (l/h) _____ 1.8
Alternator (V) _____ 12 (40 A)
Battery V (Ah) _____ 12 (45)

HYDRAULIC SYSTEM
Pump type _____ variable flow
Pump displacement (cm³) _____ 6.0 + 6.0
Pump capacity (l/min) _____ 13 + 13
Max. circuit calibration pressure (bar) _____ 190
Auxiliary system (max pressure):
AUX 1 single or double effect (l/min) _____ 28 - 200 bar
AUX 2 - optional (l/min) _____ 13 - 165 bar

SLEWING & TRAVEL SPEED
Travelling speed
(AUTO TWO SPEED) (km/h) _____ 1st : 0 ÷ 1.8 / 2nd : 0 ÷ 3.8
Slew speed (rpm) _____ 11

CONTROLS
Boom, dipper stick,
bucket and turret swing _____ 2 pilot joysticks
Track movements
(included counter rotation) _____ 2 pilot levers
Dozer blade _____ pilot lever
Auxiliary system with latch AUX 1
(single or double effect) _____ electroproportional switch on right joystick
Boom swing _____ electroproportional switch on left joystick

WEIGHTS
Transport weight with roll-bar* (kg) _____ 1255
Transport weight with roll-bar and FOPS 1 roof* (kg) _____ 1280
Operating weight with roll-bar* ISO 6016 (kg) _____ 1360
Operating weight with roll-bar
and FOPS 1 roof* ISO 6016 (kg) _____ 1385
* with rubber tracks

CIRCUIT AND COMPONENT CAPACITIES
Fuel tank (l) _____ 14.5
Hydraulic oil tank (l) _____ 9.5
Hydraulic circuit capacity (l) _____ 15
Cooling system capacity (l) _____ 4.3
Engine oil (l) _____ 3.8

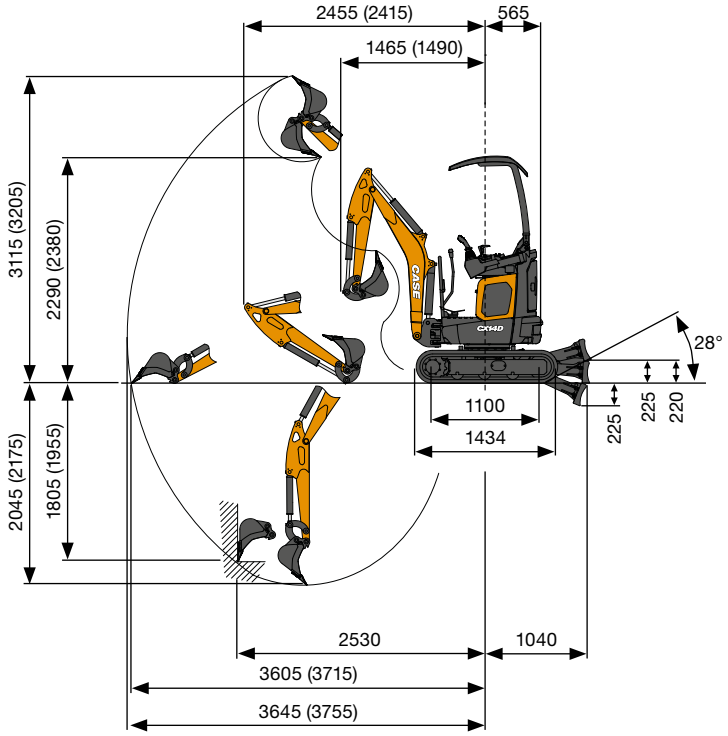

PERFORMANCE DATA		Std. Arm 1020 mm	Opt. Arm 1150 mm
Max. digging depth	mm	2045	2175
Max. dumping height	mm	2290	2380
Bucket breakout force	daN	1110	
Arm breakout force ISO 6015	daN	660	550
Traction force	daN	1000	
Ground bearing pressure with canopy	kg/cm²	0.31	
Max. slope		60% - 30°	

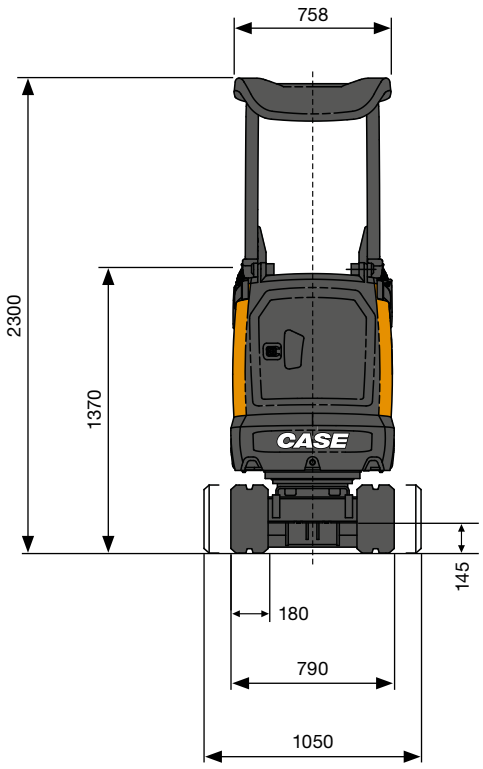

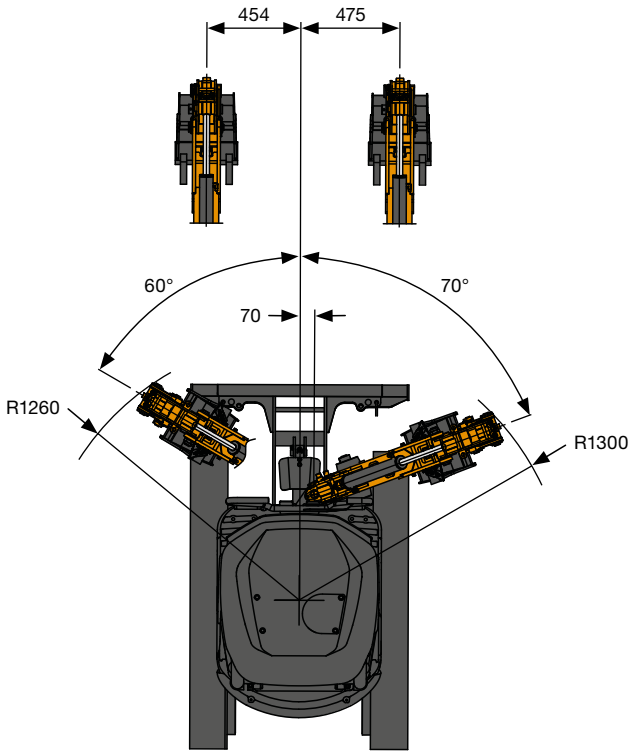

GENERAL DIMENSIONS		
Maximum width	mm	790 - 1050
Total height	mm	2300
Tracks width	mm	180
Rear rotation radius	mm	565
Digging arm length standard (optional)	mm	1020 (1150)
Rollers number (for each side)	n°	3

LIFTING CAPACITY
CX14D

Standard dipper stick L = 1020 mm

Opening arm from the rotation's center (m)
Lifting capacity (ton) at 1.0 m height
Standard counterweight

LIFTING CAPACITY	2	3	Max
Frontal and lifted dozer blade	0.30*	0.15	0.13
Lateral, open undercarriage	0.28*	0.14	0.11

* Indicates the hydraulic load limit.

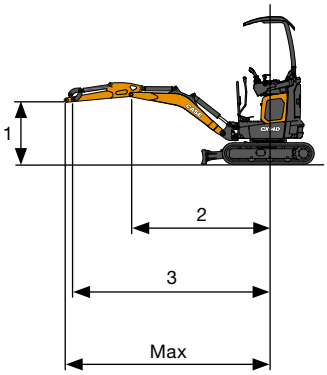

The lifting capacity is based on the ISO 10567 and it does not exceed more than the 75% of static tipping load or more than the 87% of the hydraulic lifting capacity of the machine.

STANDARD
AND OPTIONS

STANDARD EQUIPMENT

+ Tiltable Roll-bar (ROPS/TOPS)
+ Vinyl seat with Mechanical suspension (canopy)
+ Standard arm
+ Boom Lift cylinder and dozer blade cylinder protection
+ Additional counterweight
+ Servo-assisted hydraulic joysticks with Electro-Hydraulic proportional controls
+ Electro-Hydraulic proportional Swing control
+ 1st Auxiliary (AUX1) circuit with Electro-Hydraulic proportional control
+ Mechanical diverter between Single effect and Double effect AUX1
+ 2 speed travel with Automatic Shift Down (from 2nd to 1st gear if more traction is required) and Shift-up
+ Rubber tracks
+ Standard Dozer Blade
+ Extendable undercarriage
+ Operator manual
+ Ignition key, which opens every machine lock
+ Standard LED working lights (boom)
+ Battery disconnect switch
+ Variable Volume Pump
+ Standard Hydraulic oil and Lubricants

OPTIONAL EQUIPMENT

+ Roll-bar plastic cover (FOPS Level 1)
+ Anti-Theft
+ Travel alarm
+ Long arm
+ 2nd Auxiliary (AUX2) circuit with Electro-Hydraulic proportional control
+ Extra LED working lights (roof)
+ Rotating beacon
+ CASE Sitewatch and SiteConnect
+ Bio Hydraulic oil and Lubricants
+ Mechanical quick couplers
+ Buckets

CASE AFTERMARKET SOLUTIONS

+ Vast variety of attachments
+ Full range of Buckets
+ Full range of Mechanical and Hydraulic quick couplers

CNH Industrial
Deutschland GmbH
Case Baumaschinen
Benzstr. 1-3 - D-74076 Heilbronn
DEUTSCHLAND

CNH Industrial
Maquinaria Spain, S.A.
Avenida Aragón 402
28022 Madrid - ESPAÑA

CNH Industrial France, S.A.
16-18 Rue des Rochettes
91150 Morigny-Champigny
FRANCE

CNH Industrial Italia Spa
Lungo Stura Lazio 19
10156, Torino
ITALIA

CASE Construction Equipment
Cranes Farm Rd
Basildon - SS14 3AD
UNITED KINGDOM

NOTE: Standard and optional fittings can vary according to the demands and specific regulations of each country. The illustrations may include optional rather than standard fittings - consult your Case dealer. Furthermore, CNH Industrial reserves the right to modify machine specifications without incurring any obligation relating to such changes.

Conforms to directive 2006/42/EC

CASECE.COM
00800-2273-7373

The call is free from a land line.
Check in advance with your Mobile Operator if you will be charged. Toll free number not available from all calling areas.

Form No. 20236GB - MediaCross Firenze - 11/25