SINCE 1842

CASE CONSTRUCTION

E-SERIES

CRAWLER EXCAVATORS

CX130E | CX160E | CX180E

SPECIFICATIONS
CX130E

ENGINE
Model _____ FPT NEF4 (F4HGE413A*V)
Type ___ Water-cooled, 4-cycle diesel, 4-cylinder in line, High pressure common rail system (electric control), turbocharger with air cooled intercooler, SCRoF, EGR free.
Emissions _____ Stage V
Number of cylinders / Displacement (l) _____ 4 / 4.5
Bore and stroke (mm) _____ 104 x 132
Rated flywheel horse power
ISO 9249 (kW) _____ 76.4 at 2000 min^{-1} (rpm)
ISO 14396 (kW) _____ 78.8 at 2000 min^{-1} (rpm)
Maximum torque
ISO 9249 (Nm) _____ 370 at 1800 min^{-1} (rpm)
ISO 14396 (Nm) _____ 379 at 1800 min^{-1} (rpm)

HYDRAULIC SYSTEM
Main pumps _____ 2 variable displacement axial piston pumps with regulating system
Max. oil flow (l/min) _____ 2 × 129 at 2000 min^{-1}
Working circuit pressure
Boom/Arm/Bucket (MPa) ___ 34.3 - 36.3 with auto power boost
Swing circuit (MPa) _____ 27.9
Swing circuit (LR) (MPa) _____ 24.0
Travel circuit (MPa) _____ 34.3
Pilot pump _____ 1 gear pump
Max. oil flow (l/min) _____ 20
Working circuit pressure (MPa) _____ 3.9
Blade pump (CX130E Blade) _____ 1 gear pump
Max. oil flow (l/min) _____ 54 at 2000 min^{-1}
Working circuit pressure (MPa) _____ 20.6
Boom cylinders
Bore (mm) _____ 105
Stroke (mm) _____ 961
Arm cylinder
Bore (mm) _____ 115
Stroke (mm) _____ 1108
Bucket cylinder
Bore (mm) _____ 95
Stroke (mm) _____ 881
Bore (LR) (mm) _____ 85
Stroke (LR) (mm) _____ 665

SWING
Swing motor _____ Fixed displacement axial piston motor
Maximum swing speed (min^{-1}) _____ 14.3
Maximum swing speed (LR) (min^{-1}) _____ 6.9
Swing torque (kNm) _____ 33
Swing torque (LR) (kNm) _____ 28.2

FILTERS
Suction filter (µm) _____ 105
Return filter (µm) _____ 6
Pilot line filter (µm) _____ 8

ELECTRICAL SYSTEM
Voltage (V) _____ 24
Alternator (Amp) _____ 90
Starter (V - kW) _____ 24 - 4.0
Battery _____ 2 X 12 V 72 Ah/5HR

UNDERCARRIAGE
Travel motor _____ Variable displacement axial piston motor
High travel speed (Automatic travel speed shifting) (km/h) _ 5.7
Low travel speed (km/h) _____ 3.4
Drawbar pull (Blade & LR / LC) (kN) _____ 116 / 117
Number of carrier rollers (each side) (Blade/LC) _____ 1 / 2
Number of track rollers (each side) _____ 7
Number of shoes (each side) (Blade/LC) _____ 43 / 46
Type of shoes _____ Triple grouser shoes
Gradeability _____ 70% (35°)

NOISE
External guaranteed sound level
(EU Directive 2000/14/EC) _____ LwA 98 dB(A)
Operator cab sound pressure level (ISO 6396) _ LpA 69 dB(A)

CIRCUIT AND COMPONENT CAPACITIES
Fuel tank (l) _____ 250
Hydraulic system (l) _____ 157
Hydraulic tank (l) _____ 82
AdBlue tank (l) _____ 60

PERFORMANCE DATA		Arm 2.50 m	Arm 3.01 m	Arm 2.11 m
Boom length	mm	4630	4630	4630
Bucket radius	mm	1200	1200	1200
Bucket wrist action	°	178	178	178
A Maximum reach at GRP	mm	8170	8640	7810
B Maximum reach	mm	8310	8770	7960
C Max. digging depth	mm	5550	6050	5160
D Max. digging height	mm	8770	9050	8550
E Max. dumping height	mm	6390	6680	6170
F Min. swing radius	mm	2340	2660	2360

DIGGING FORCE (ISO 6015)		Arm 2.50 m	Arm 3.01 m	Arm 2.11 m
Arm digging force	kN	62	56	70
with Auto power up	kN	66	60	74
Bucket digging force	kN	90	90	90
with Auto power up	kN	95	95	95

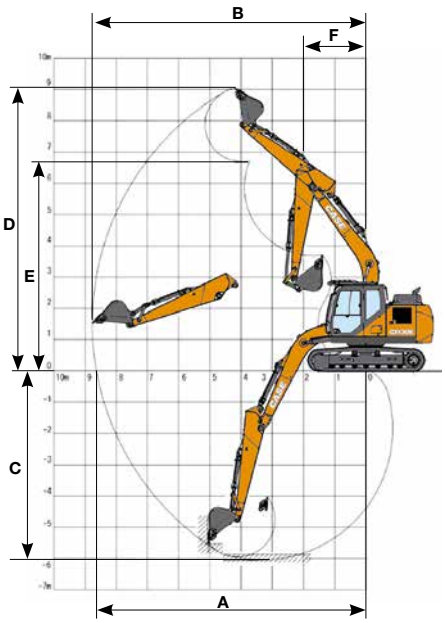

SPECIFICATIONS
CX130E BLADE-LC

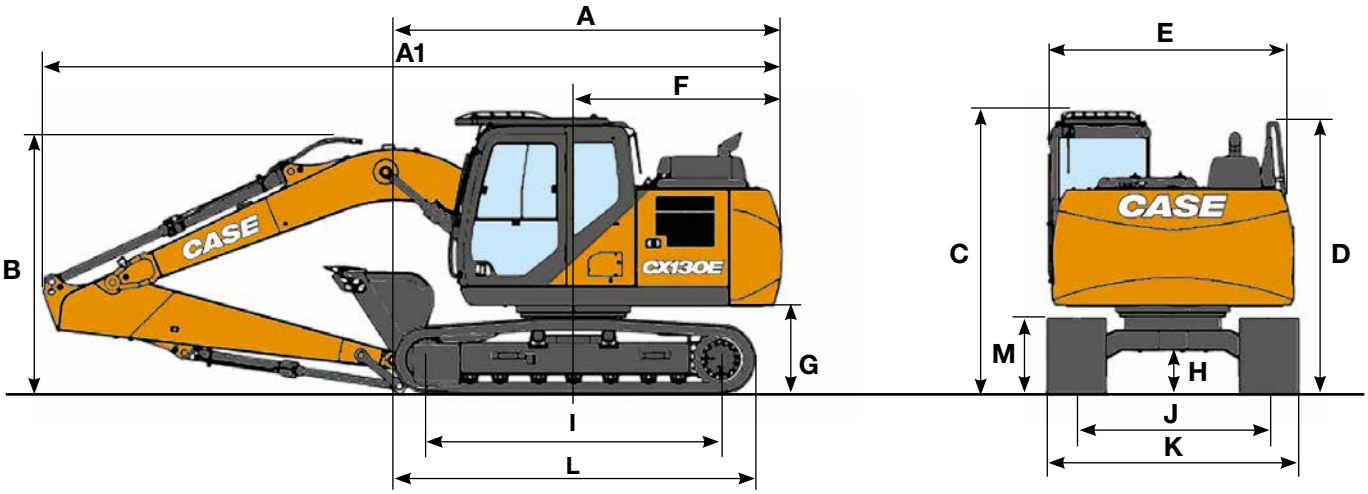

GENERAL DIMENSIONS		Arm 2.50 m	Arm 3.01 m	Arm 2.11 m
A Overall length (without attachment) (Blade/LC)	mm	4170 / 4050	4170 / 4050	4170 / 4050
A1 Overall length (with attachment) (Blade/LC)	mm	7910 / 7660	7930 / 7680	7900 / 7660
B Overall height (to top of boom)	mm	2760	2740	2670
C Cab height	mm	2910	2910	2910
D Overall height (to top of handrail)	mm	2800	2800	2800
E Upper structure overall width	mm	2490	2490	2490
F Swing (rear end radius)	mm	2190	2190	2190
G Clearance height under upper structure	mm	900	900	900
H Minimum ground clearance (Blade/LC)	mm	425 / 420	425 / 420	425 / 420
I Wheel base (center to center of wheels) (Blade/LC)	mm	2790 / 3040	2790 / 3040	2790 / 3040
J Track gauge	mm	1990	1990	1990
K Undercarriage overall width (with 600 mm shoes)	mm	2590	2590	2590
L Crawler overall length (Blade/LC)	mm	3500 / 3760	3500 / 3760	3500 / 3760
M Crawler tracks height	mm	780	780	780

WEIGHT AND GROUND PRESSURE

With 2.50 m arm, 0.5 m³ bucket, 600 mm grouser shoes, operator, lubricant, coolant, full fuel tank and FOPS protection level 2.

	WEIGHT	GROUND PRESSURE
Blade	13900 kg	0.037 MPa
LC	13300 kg	0.033 MPa

Counterweight: 1870 kg

With 5.30 m arm, 0.28 m³ bucket, 700 mm grouser shoes, operator, lubricant, coolant, full fuel tank and FOPS protection level 2.

	WEIGHT	GROUND PRESSURE
LR	15100 kg	0.033 MPa

Counterweight: 3350 kg

HAMMER
CX130E

Direct Fit

Model	Install Weight kg	Reference machine settings		Arm 2.11 m	Arm 2.50 m	Arm 3.01 m
		Flow l/min	Relief Pressure Mpa			
CB BREAKER						
CB135S	630	87	18-21	□	□	□
CB150S	950	87	19-21	□	—	—

□ Applicable
— Not applicable

SPECIFICATIONS
CX130E LONG REACH

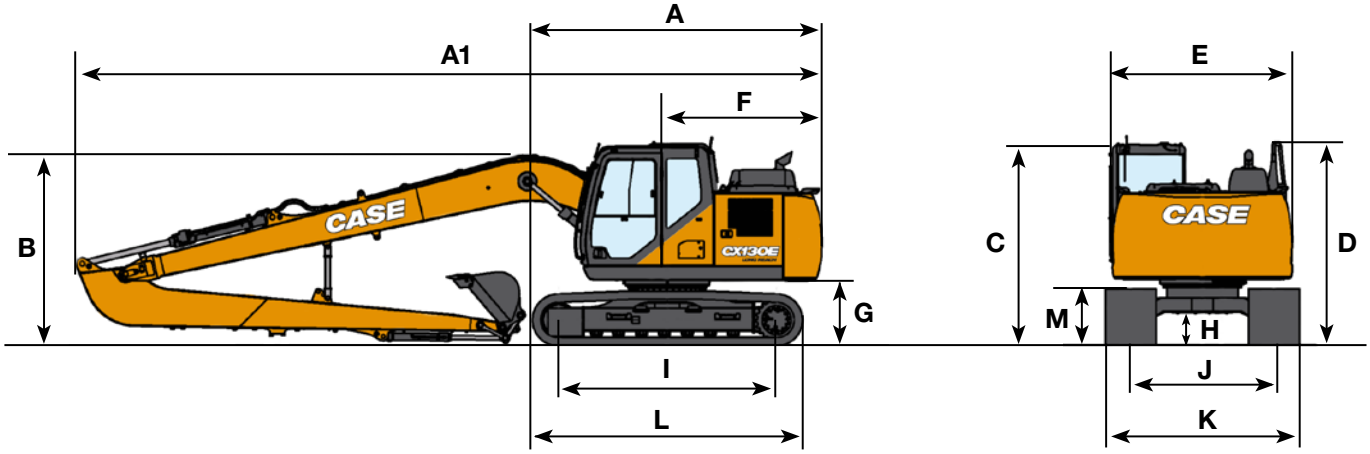

GENERAL DIMENSIONS			Arm 5.30 m
A	Overall length (without attachment)	mm	4050
A1	Overall length (with attachment)	mm	10430
B	Overall height (to top of boom)	mm	2730
C	Cab height	mm	2920
D	Overall height (to top of handrail)	mm	2810
E	Upper structure overall width	mm	2490
F	Swing (rear end radius)	mm	2190
G	Clearance height under upper structure	mm	900
H	Minimum ground clearance	mm	420
I	Wheel base (center to center of wheels)	mm	3040
L	Crawler overall length	mm	3760
M	Crawler tracks height	mm	785
J	Track gauge	mm	1990
K	Undercarriage overall width (with 700 mm shoes)	mm	2690

PERFORMANCE DATA			Arm 5.30 m
	Boom length	mm	7400
	Bucket radius	mm	1050
	Bucket wrist action		180°
A	Maximum reach at GRP	mm	13010
B	Maximum reach	mm	13100
C	Max. digging depth	mm	10130
D	Max. digging height	mm	12070
E	Max. dumping height	mm	10090
F	Min. swing radius	mm	3240

DIGGING FORCE (ISO 6015)	Arm 5.30 m
Arm digging force	23 kN
Bucket digging force	35 kN

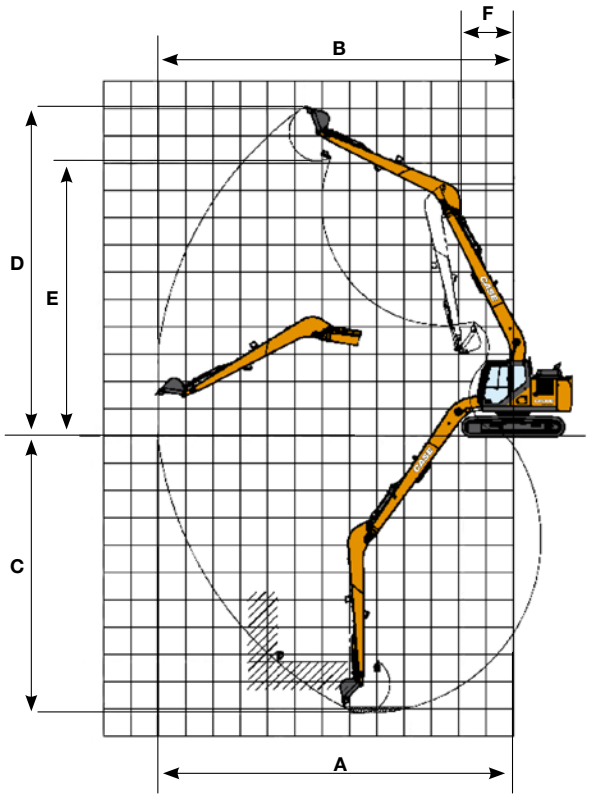

LIFTING CAPACITY
CX130E BLADE-LC

	REACH								
	2.0 m		4.0 m		6.0 m		At max reach		
Front / Side									m
BLADE DOWN - Short arm 2.11 m, 600 mm shoes, max reach 6.76 m									
6.0 m			3600*	3600*			2730*	2730*	5.00
4.0 m			4270*	4270*	3800*	2510	2440*	2330	6.27
2.0 m			5970*	4330	4190*	2410	2490*	2020	6.74
0 m			6990*	4050	4540*	2310	2840*	2040	6.58
-2.0 m	7910*	7910*	6620*	4030			3840*	2460	5.74
BLADE DOWN - Standard arm 2.50 m, 600 mm shoes, max reach 7.11 m									
6.0 m							2200*	2200*	5.47
4.0 m			3870*	3870*	3550*	2570	2010*	2010*	6.65
2.0 m			5650*	4430	4050*	2450	2060*	1900	7.09
0 m			6920*	4110	4510*	2340	2340*	1910	6.94
-2.0 m	7160*	7160*	6840*	4040	4300*	2320	3080*	2250	6.15
-4.0 m			4810*	4210			4130*	3710	4.39
BLADE DOWN - Long arm 3.01 m, 600 mm shoes, max reach 7.57 m									
6.0 m					2170*	2170*	2000*	2000*	6.06
4.0 m					3170*	2580	1850*	1850*	7.14
2.0 m			5070*	4470	3750*	2440	1910*	1700	7.55
0 m			6620*	4080	4340*	2300	2140*	1700	7.41
-2.0 m	6350*	6350*	6890*	3950	4410*	2240	2730*	1950	6.68
-4.0 m	10230*	10230*	5580*	4050			3970*	2890	5.11
BLADE UP - Short arm 2.11 m, 600 mm shoes, max reach 6.76 m									
6.0 m			3600*	3600*			2730*	2730*	5.00
4.0 m			4270*	4270*	3080	2360	2440*	2190	6.27
2.0 m			5520	4030	2970	2260	2490	1890	6.74
0 m			5210	3770	2870	2160	2520	1910	6.58
-2.0 m	7910*	7910*	5190	3740			3060	2300	5.74
BLADE UP - Standard arm 2.50 m, 600 mm shoes, max reach 7.11 m									
6.0 m							2200*	2200*	5.47
4.0 m			3870*	3870*	3140	2420	2010*	2010*	6.65
2.0 m			5620	4130	3010	2300	2060*	1780	7.09
0 m			5270	3820	2890	2190	2340*	1790	6.94
-2.0 m	7160*	7160*	5200	3760	2870	2170	2780	2100	6.15
-4.0 m			4810*	3910			4130*	3460	4.39
BLADE UP - Long arm 3.01 m, 600 mm shoes, max reach 7.57 m									
6.0 m					2170*	2170*	2000*	2000*	6.06
4.0 m					3160	2430	1850*	1800	7.14
2.0 m			5070*	4170	3000	2290	1910*	1590	7.55
0 m			5240	3790	2850	2150	2100	1590	7.41
-2.0 m	6350*	6350*	5100	3660	2790	2090	2410	1820	6.68
-4.0 m	10230*	10230*	5210	3760			3620	2700	5.11

* The above loads (kg) are compliant to the ISO standards and refer to the excavator equipped without bucket. The indicated loads are no more than 87% of hydraulic system lift capacity or 75% of static tipping load. Values marked with an asterisk (*) are limited by the hydraulic lifting capacity.

LIFTING CAPACITY
CX130E BLADE-LC

Front / Side	REACH 2.0 m		4.0 m		6.0 m		At max reach		m
LC UNDERCARRIAGE - Short arm 2.11 m, 600 mm shoes, max reach 6.76 m									
6.0 m			3600*	3600*			2730*	2730*	5.00
4.0 m			4270*	4270*	3440	2260	2440*	2090	6.27
2.0 m			5970*	3860	3330	2160	2490*	1810	6.74
0 m			5980	3600	3220	2060	2820	1820	6.58
-2.0 m	7910*	7910*	5950	3570			3440	2200	5.74
LC UNDERCARRIAGE - Standard arm 2.50 m, 600 mm shoes, max reach 7.11 m									
6.0 m							2200*	2200*	5.47
4.0 m			3870*	3870*	3500	2320	2010*	1950	6.65
2.0 m			5650*	3960	3370	2200	2060*	1700	7.09
0 m			6040	3650	3250	2090	2340*	1710	6.94
-2.0 m	7160*	7160*	5960	3590	3220	2070	3080*	2000	6.15
-4.0 m			4810*	3750			4130*	3310	4.39
LC UNDERCARRIAGE - Long arm 3.01 m, 600 mm shoes, max reach 7.57 m									
6.0 m					2170*	2170*	2000*	2000*	6.06
4.0 m					3170*	2330	1850*	1720	7.14
2.0 m			5070*	4010	3360	2190	1910*	1520	7.55
0 m			6010	3620	3210	2040	2140*	1510	7.41
-2.0 m	6350*	6350*	5860	3490	3150	1990	2710	1730	6.68
-4.0 m	10230*	10230*	5580*	3590			3970*	2570	5.11

LIFTING CAPACITY
CX130E LONG REACH

Front / Side	REACH 2.0 m		4.0 m		6.0 m		8.0 m		10.0 m		12.0 m		At max reach		m
Long Reach arm 5.30 m, 700 mm shoes, max reach 12.04 m															
10.0 m							1040*	1040*					720*	720*	8.49
8.0 m							1400*	1400*	770*	770*			660*	660*	10.12
6.0 m							1530*	1530*	1440*	1400			650*	650*	11.17
4.0 m					2050*	2050*	1800*	1800*	1650*	1340			660*	660*	11.79
2.0 m			4300*	4300*	2760*	2700	2150*	1780	1840*	1250	760*	760*	710*	710*	12.04
0 m			2770*	2770*	3390*	2370	2480*	1610	1820	1160			790*	790*	11.95
-1.5 m	1420*	1420*	2700*	2700*	3540	2190	2380	1500	1750	1090			940*	890	11.52
-4.0 m	2060*	2060*	3280*	3280*	3470	2130	2330	1450	1730	1070			1190*	980	10.69
-6.0 m	2780*	2780*	4240*	3860	3510	2160	2350	1470					1750*	1210	9.37
-8.0 m			4140*	4100	2860*	2300							2240*	1790	7.29

* The above loads (kg) are compliant to the ISO standards and refer to the excavator equipped without bucket. The indicated loads are no more than 87% of hydraulic system lift capacity or 75% of static tipping load. Values marked with an asterisk (*) are limited by the hydraulic lifting capacity.

BUCKETS
CX130E

CX130E - Direct Mount

Capacity m³ (ISO7451 HEAPED)	Width mm	Weight kg	Arm 2.11 m	Arm 2.50 m	Arm 3.01 m
GENERAL PURPOSE BUCKETS					
0.21	450	250	○	○	○
0.31	600	290	○	○	○
0.41	750	330	○	○	○
0.52	900	360	○	○	○
0.58	1000	400	○	○	●
0.66	1100	430	●	●	▲
0.73	1200	450	●	▲	■
HEAVY DUTY BUCKETS					
0.21	450	350	○	○	○
0.31	600	400	○	○	○
0.42	750	460	○	○	○
0.45	800	470	○	○	○
0.52	900	510	○	○	●
0.60	1000	550	○	●	▲
0.67	1100	580	●	▲	■
0.74	1200	620	▲	■	—
GRADING BUCKETS					
0.59	1500	440*	○	●	●
0.72	1800	510*	●	▲	■
0.80	2000	550*	▲	■	—
DITCH CLEANING BUCKETS					
0.54	1830	480*	○	○	●
90° TILT DITCH CLEANING BUCKETS**					
0.46	1500	640*	○	●	▲
0.55	1800	690*	●	▲	■
0.61	2000	730*	▲	■	—

CX130E - Quick coupled

Capacity m³ (ISO7451 HEAPED)	Width mm	Weight kg	Arm 2.11 m	Arm 2.50 m	Arm 3.01 m
GENERAL PURPOSE BUCKETS					
0.21	450	250	○	○	○
0.31	600	290	○	○	○
0.41	750	330	○	○	○
0.52	900	360	○	○	●
0.58	1000	400	●	●	▲
0.66	1100	430	●	▲	■
0.73	1200	450	▲	■	—
HEAVY DUTY BUCKETS					
0.21	450	350	○	○	○
0.31	600	400	○	○	○
0.42	750	460	○	○	●
0.45	800	470	○	○	●
0.52	900	510	○	●	▲
0.60	1000	550	●	▲	■
0.67	1100	580	▲	■	—
0.74	1200	620	■	—	—
GRADING BUCKETS					
0.59	1500	440*	●	●	■
0.72	1800	510*	▲	■	—
0.80	2000	550*	■	—	—
DITCH CLEANING BUCKETS					
0.54	1830	480*	●	●	▲

* with bolt-on cutting edge
**Tilt angle 45° L/R Connect to Low-Flow Auxiliary Hydraulic Circuit

BUCKETS
CX130E LONG REACH

CX130E LR - Direct Mount

Capacity m³ (ISO7451 HEAPED)	Width mm	Weight kg	Arm 5.30 m
GENERAL PURPOSE BUCKETS			
0.10	300	125	○
0.12	350	130	○
0.15	400	140	○
0.17	450	145	○
0.19	500	150	○
0.24	600	170	●
0.32	750	200	■
DITCH CLEANING BUCKETS			
0.27	1200	170*	●
0.35	1500	200*	■
GRADING BUCKET			
0.35	1500	270*	■

○ Rated material density up to 2 ton/m³
● Rated material density up to 1.6 ton/m³
▲ Rated material density up to 1.4 ton/m³

CX130E LR - Quick coupled

Capacity m³ (ISO7451 HEAPED)	Width mm	Weight kg	Arm 5.30 m
GENERAL PURPOSE BUCKETS			
0.10	300	125	○
0.12	350	130	○
0.15	400	140	○
0.17	450	145	○
0.19	500	150	●
0.24	600	170	■
DITCH CLEANING BUCKET			
0.27	1200	170*	■

* with bolt-on cutting edge

■ Rated material density up to 1.2 ton/m³
— Not applicable

SPECIFICATIONS
CX160E

ENGINE

Model	FPT NEF4 (F4HGE413B*V)
Type	Water-cooled, 4-cycle diesel, 4-cylinder in line, High pressure common rail system (electric control), turbocharger with air cooled intercooler, SCRoF, EGR free.
Emissions	Stage V
Number of cylinders / Displacement (l)	4 / 4.5
Bore and stroke (mm)	104 x 132
Rated flywheel horse power	
ISO 9249 (kW)	90.4 at 2200 min^{-1} (rpm)
ISO 14396 (kW)	96.5 at 2200 min^{-1} (rpm)
Maximum torque	
ISO 9249 (Nm)	456 at 1600 min^{-1} (rpm)
ISO 14396 (Nm)	470 at 1600 min^{-1} (rpm)

HYDRAULIC SYSTEM

Main pumps	2 variable displacement axial piston pumps with regulating system
Max. oil flow (l/min)	2 × 159 at 2200 min^{-1}
Working circuit pressure	
Boom/Arm/Bucket (MPa)	34.3 - 36.3 with auto power boost
Swing circuit (MPa)	27.9
Travel circuit (MPa)	34.3
Pilot pump	1 gear pump
Max. oil flow (l/min)	22
Working circuit pressure (MPa)	3.9
Boom cylinders	
Bore (mm)	115
Stroke (mm)	1179
Arm cylinder	
Bore (mm)	125
Stroke (mm)	1280
Bucket cylinder	
Bore (mm)	105
Stroke (mm)	985

SWING

Swing motor	Fixed displacement axial piston motor
Maximum swing speed (min^{-1})	8.5
Swing torque (kNm)	45.1

FILTERS

Suction filter (µm)	105
Return filter (µm)	6
Pilot line filter (µm)	8

ELECTRICAL SYSTEM

Voltage (V)	24
Alternator (Amp)	50
Starter (V - kW)	24 - 4.0
Battery	2 X 12 V - 72 Ah/5HR

UNDERCARRIAGE

Travel motor	Variable displacement axial piston motor
Travel speeds	
High travel speed (Automatic travel speed shifting) (km/h)	5.2
Low travel speed (km/h)	3.0
Drawbar pull (kN)	161
Number of carrier rollers (each side)	2
Number of track rollers (each side)	7
Number of shoes (each side)	44
Type of shoes	Triple grouser shoes
Gradeability	70% (35°)

NOISE

External guaranteed sound level (EU Directive 2000/14/EC) (dB(A))	LwA 101
Operator cab sound pressure level (ISO 6396) (dB(A))	LpA 69

CIRCUIT AND COMPONENT CAPACITIES

Fuel tank (l)	300
Hydraulic system (l)	170
Hydraulic tank (l)	82
AdBlue tank (l)	60

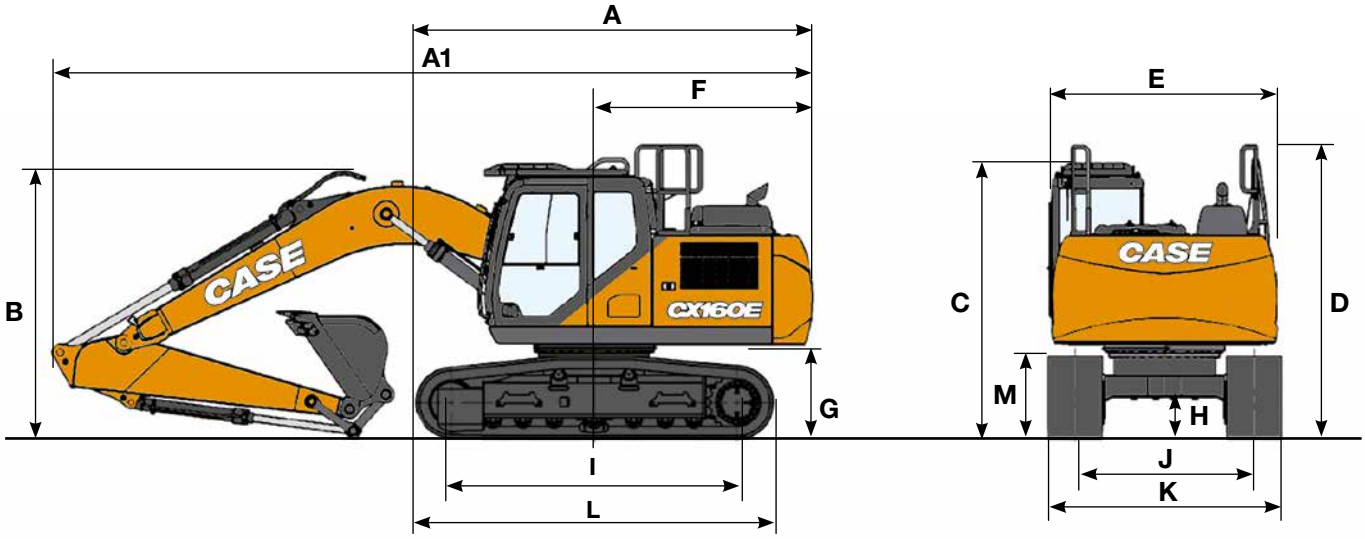

GENERAL DIMENSIONS		Arm 2.62 m	Arm 3.05 m
A Overall length (without attachment)	mm	4480	4480
A1 Overall length (with attachment)	mm	8520	8570
B Overall height (to top of boom)	mm	2960	3130
C Cab height	mm	3050	3050
D Overall height (to top of handrail)	mm	3140	3140
E Upper structure overall width	mm	2520	2520
F Swing (rear end radius)	mm	2520	2520
G Clearance height under upper structure	mm	1030	1030
H Minimum ground clearance	mm	420	420
I Wheel base (Center to center of wheels)	mm	3190	3190
J Track gauge	mm	1990	1990
K Undercarriage overall width (with 600 mm shoes)	mm	2590	2590
L Crawler overall length	mm	3990	3990
M Crawler tracks height	mm	920	920

WEIGHT AND GROUND PRESSURE

With 2.62 m arm, 0.62 m³ bucket , 600 mm grouser shoes, operator, lubricant, coolant, full fuel tank and FOPS protection level 2.

	WEIGHT	GROUND PRESSURE
LC	17300 kg	0.041 MPa

Counterweight: 2820 kg

PERFORMANCE DATA		Arm 2.62 m	Arm 3.05 m
Boom length	mm	5150	5150
Bucket radius	mm	1350	1350
Bucket wrist action	°	178	178
A Maximum reach at GRP	mm	8870	9220
B Maximum reach	mm	9040	9380
C Max. digging depth	mm	6060	6490
D Max. digging height	mm	9240	9290
E Max. dumping height	mm	6610	6690
F Min. swing radius	mm	2990	3050

DIGGING FORCE (ISO 6015)		Arm 2.62 m	Arm 3.05 m
Arm digging force	kN	79	72
with Auto power up	kN	84	77
Bucket digging force	kN	112	112
with Auto power up	kN	118	118

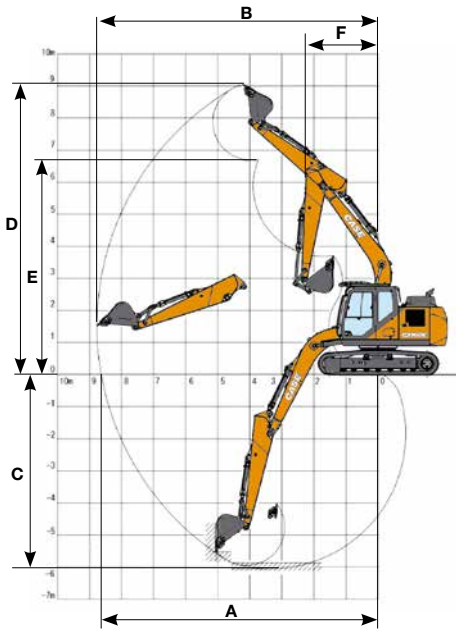

LIFTING CAPACITY
CX160E

REACH	2.0 m Front	2.0 m Side	4.0 m Front	4.0 m Side	6.0 m Front	6.0 m Side	At max reach Front	At max reach Side	m
Standard arm 2.62 m, 600 mm shoes, max reach 7.69 m									
6.0 m					3920*	3390	2660*	2660*	6.37
4.0 m			6090*	6090*	5080	3290	2540*	2360	7.34
2.0 m			8890*	5410	4830	3070	2650*	2120	7.69
0 m			8660	5010	4630	2880	3010*	2130	7.49
-2.0 m	8100*	8100*	8570	4940	4570	2830	3920*	2470	6.70
-4.0 m	13670*	13670*	8060*	5120			5960*	3730	5.05

REACH	2.0 m Front	2.0 m Side	4.0 m Front	4.0 m Side	6.0 m Front	6.0 m Side	8.0 m Front	8.0 m Side	At max reach Front	At max reach Side	m
Long arm 3.05 m, 600 mm shoes, max reach 8.03 m											
8.0 m									2820*	2820*	4.94
6.0 m					3850*	3440			2380*	2380*	6.78
4.0 m					4690*	3310			2310*	2180	7.70
2.0 m			8240*	5410	4840	3070	2570*	1970	2440*	1960	8.03
0 m			8650	4940	4610	2860			2790*	1960	7.84
-2.0 m	7650*	7650*	8490	4830	4510	2770			3570	2230	7.09
-4.0 m	14120*	14120*	8640	4960					5160	3180	5.56

* The above loads (kg) are compliant to the ISO standards and refer to the excavator equipped without bucket. The indicated loads are no more than 87% of hydraulic system lift capacity or 75% of static tipping load. Values marked with an asterisk (*) are limited by the hydraulic lifting capacity.

HAMMER
CX160E

Direct Fit

Model	Install Weight kg	Reference machine settings: Flow l/min	Reference machine settings: Relief Pressure Mpa	Arm 2.62 m	Arm 3.05 m
CB BREAKER					
CB150S	970	95	19-21	□	—
CB240S	1100	95	19-21	—	—

□ Applicable
— Not applicable

BUCKETS
CX160E

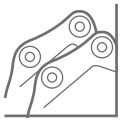

CX160E - Direct Mount

Capacity m³ (ISO7451 HEAPED)	Width mm	Weight kg	Arm 2.62 m	Arm 3.05 m
GENERAL PURPOSE BUCKETS				
0.24	450	350	○	○
0.36	600	390	○	○
0.50	750	440	○	○
0.62	900	480	○	○
0.70	1000	500	○	●
0.78	1100	540	●	▲
0.87	1200	570	▲	■
1.00	1350	630	■	—
HEAVY DUTY BUCKETS				
0.26	450	420	○	○
0.38	600	480	○	○
0.51	750	550	○	○
0.65	900	620	○	●
0.70	1000	660	○	●
0.75	1050	680	●	●
0.78	1100	700	●	▲
0.91	1200	740	▲	■
1.00	1300	800	■	—
GRADING BUCKETS				
0.59	1500	440*	○	○
0.72	1800	510*	○	●
0.85	2100	570*	●	▲
DITCH CLEANING BUCKETS				
0.86	1830	630*	●	▲
90° TILT DITCH CLEANING BUCKETS**				
0.46	1500	650*	○	○
0.55	1800	700*	○	●
0.61	2000	740*	●	▲
0.68	2200	810*	▲	■
0.74	2400	840*	■	—

CX160E - Quick coupled

Capacity m³ (ISO7451 HEAPED)	Width mm	Weight kg	Arm 2.62 m	Arm 3.05 m
GENERAL PURPOSE BUCKETS				
0.24	450	350	○	○
0.36	600	390	○	○
0.50	750	440	○	○
0.62	900	480	○	●
0.70	1000	500	●	▲
0.78	1100	540	▲	■
0.87	1200	570	■	—
HEAVY DUTY BUCKETS				
0.26	450	420	○	○
0.38	600	480	○	○
0.51	750	550	○	●
0.65	900	620	●	▲
0.70	1000	660	▲	■
0.75	1050	680	■	■
0.78	1100	700	■	—
GRADING BUCKETS				
0.59	1500	440*	○	●
0.72	1800	510*	●	■
0.80	2100	570*	■	—
DITCH CLEANING BUCKETS				
0.86	1830	630*	■	—

* with bolt-on cutting edge
**Tilt angle 45° L/R Connect to Low-Flow Auxiliary Hydraulic Circuit

○ Rated material density up to 2 ton/m³
● Rated material density up to 1.6 ton/m³
▲ Rated material density up to 1.4 ton/m³
■ Rated material density up to 1.2 ton/m³
— Not applicable

SPECIFICATIONS
CX180E

ENGINE

Model _____ FPT NEF4 (F4HGE413B*V)
Type _____ Water-cooled, 4-cycle diesel, 4-cylinder in line, High pressure common rail system (electric control), turbocharger with air cooled intercooler, SCRoF, EGR free.
Emissions _____ Stage V
Number of cylinders / Displacement (l) _____ 4 / 4.5
Bore and stroke (mm) _____ 104 x 132

Rated flywheel horse power
ISO 9249 (kW) _____ 90.4 at 2200 min^{-1} (rpm)
ISO 14396 (kW) _____ 96.5 at 2200 min^{-1} (rpm)

Maximum torque
ISO 9249 (Nm) _____ 456 at 1600 min^{-1} (rpm)
ISO 14396 (Nm) _____ 470 at 1600 min^{-1} (rpm)

HYDRAULIC SYSTEM

Main pumps ___ 2 variable displacement axial piston pumps with regulating system
Max. oil flow (l/min) _____ 2 × 159 at 2200 min^{-1}

Working circuit pressure
Boom/Arm/Bucket (MPa) _____ 34.3 - 36.3 with auto power boost
Swing circuit (MPa) _____ 27.9
Travel circuit (MPa) _____ 34.3
Pilot pump _____ 1 gear pump
Max. oil flow (l/min) _____ 22
Working circuit pressure (MPa) _____ 3.9

Boom cylinders
Bore (mm) _____ 115
Stroke (mm) _____ 1179

Arm cylinder
Bore (mm) _____ 125
Stroke (mm) _____ 1280

Bucket cylinder
Bore (mm) _____ 105
Stroke (mm) _____ 985

SWING

Swing motor _____ Fixed displacement axial piston motor
Maximum swing speed (min^{-1}) _____ 8.5
Swing torque (kNm) _____ 45.1

FILTERS

Suction filter (µm) _____ 105
Return filter (µm) _____ 6
Pilot line filter (µm) _____ 8

ELECTRICAL SYSTEM

Voltage (V) _____ 24
Alternator (Amp) _____ 50
Starter (V - kW) _____ 24 - 4.0
Battery _____ 2 X 12 V - 72 Ah/5HR

UNDERCARRIAGE

Travel motor _____ Variable displacement axial piston motor

Travel speeds
High travel speed (Automatic travel speed shifting) (km/h) ____ 4.3
Low travel speed (km/h) _____ 2.6
Drawbar pull (kN) _____ 190
Number of carrier rollers (each side) _____ 2
Number of track rollers (each side) _____ 7
Number of shoes (each side) _____ 46
Type of shoes _____ Triple grouser shoes
Gradeability _____ 70% (35°)

NOISE

External guaranteed sound level
(EU Directive 2000/14/EC) _____ LwA 101 dB(A)
Operator cab sound pressure level (ISO 6396) _____ LpA 69 dB(A)

CIRCUIT AND COMPONENT CAPACITIES

Fuel tank (l) _____ 300
Hydraulic system (l) _____ 170
Hydraulic tank (l) _____ 82
AdBlue tank (l) _____ 60

PERFORMANCE DATA		Arm 2.62 m	Arm 3.05 m
Boom length	mm	5150	5150
Bucket radius	mm	1350	1350
Bucket wrist action	°	178	178
A Maximum reach at GRP	mm	8870	9210
B Maximum reach	mm	9040	9380
C Max. digging depth	mm	6040	6470
D Max. digging height	mm	9250	9300
E Max. dumping height	mm	6630	6710
F Min. swing radius	mm	2990	3050

DIGGING FORCE (ISO 6015)		Arm 2.62 m	Arm 3.05 m
Arm digging force	kN	79	72
with Auto power up	kN	84	77
Bucket digging force	kN	112	112
with Auto power up	kN	118	118

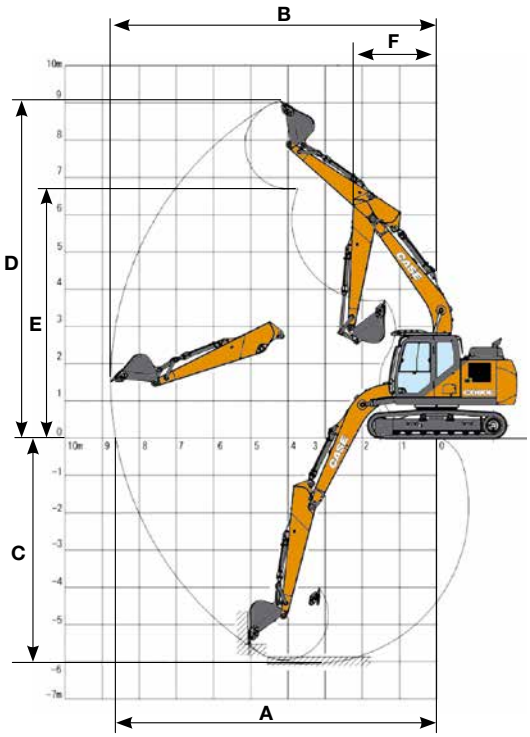

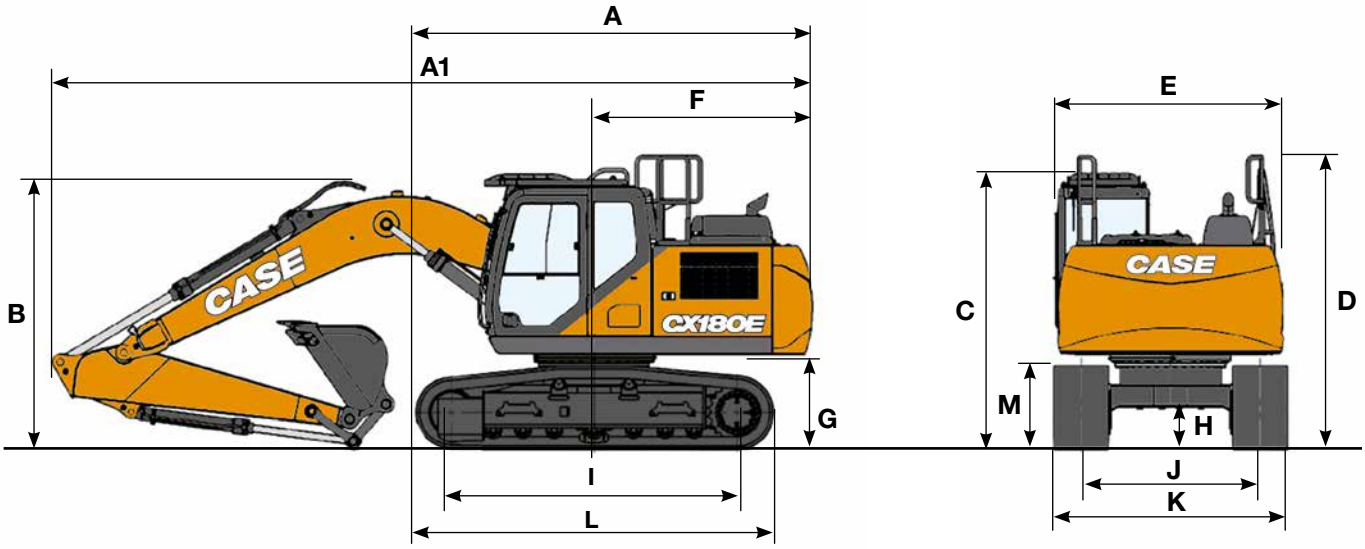

GENERAL DIMENSIONS		Arm 2.62 m	Arm 3.05 m
A Overall length (without attachment)	mm	4580	4580
A1 Overall length (with attachment)	mm	8510	8570
B Overall height (to top of boom)	mm	2960	3130
C Cab height	mm	3070	3070
D Overall height (to top of handrail)	mm	3150	3150
E Upper structure overall width	mm	2520	2520
F Swing (rear end radius)	mm	2520	2520
G Clearance height under upper structure	mm	1040	1040
H Minimum ground clearance	mm	440	440
I Wheel base (center to center of wheels)	mm	3370	3370
J Track gauge	mm	2200	2200
K Undercarriage overall width (with 600 mm shoes)	mm	2800	2800
L Crawler overall length	mm	4180	4180
M Crawler tracks height	mm	920	920

WEIGHT AND GROUND PRESSURE

With 2.62 m arm, 0.68 m^3 bucket , 600 mm grouser shoes, operator, lubricant, coolant, full fuel tank and FOPS protection level 2.

	WEIGHT	GROUND PRESSURE
LC	18400 kg	0.041 MPa

Counterweight: 3120 kg

LIFTING CAPACITY
CX180E

REACH									
Front / Side	2.0 m		4.0 m		6.0 m		At max reach		m
Standard arm 2.62 m, 600 mm shoes, max reach 7.69 m									
6.0 m					3940*	3940*	2660*	2660*	6.38
4.0 m			6110*	6110*	5080*	3930	2530*	2530*	7.35
2.0 m			8910*	6600	5630	3710	2650*	2580	7.69
0 m			10290	6180	5420	3520	3020*	2610	7.48
-2.0 m	8140*	8140*	10210	6110	5360	3470	3940*	3020	6.69
-4.0 m	13620*	13620*	8020*	6300			5960*	4580	5.03

REACH											
Front / Side	2.0 m		4.0 m		6.0 m		8.0 m		At max reach		m
Long arm 3.05 m, 600 mm shoes, max reach 8.03 m											
8.0 m									2820*	2820*	4.96
6.0 m					3860*	3860*			2380*	2380*	6.79
4.0 m					4690*	3960			2310*	2310*	7.70
2.0 m			8260*	6680	5640	3710	2580*	2410	2440*	2400	8.03
0 m			10200*	6170	5400	3500			2790*	2420	7.83
-2.0 m	7690*	7690*	10120	6030	5300	3410			3620*	2750	7.08
-4.0 m	14190*	14190*	8720*	6160					5890*	3910	5.54

* The above loads (kg) are compliant to the ISO standards and refer to the excavator equipped without bucket. The indicated loads are no more than 87% of hydraulic system lift capacity or 75% of static tipping load. Values marked with an asterisk (*) are limited by the hydraulic lifting capacity.

HAMMER
CX180E

Direct Fit

Model	Install Weight kg	Reference machine settings		Arm 2.62 m	Arm 3.05 m
		Flow l/min	Relief Pressure Mpa		
CB BREAKER					
CB240S	1100	95	19-21	□	—

□ Applicable
— Not applicable

BUCKETS
CX180E

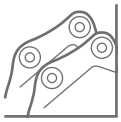

CX180E - Direct Mount

Capacity m³ (ISO7451 HEAPED)	Width mm	Weight kg	Arm 2.62 m	Arm 3.05 m
GENERAL PURPOSE BUCKETS				
0.24	450	350	○	○
0.36	600	390	○	○
0.50	750	440	○	○
0.62	900	480	○	○
0.70	1000	500	○	○
0.78	1100	540	○	●
0.87	1200	570	●	▲
1.00	1350	630	▲	■
HEAVY DUTY BUCKETS				
0.26	450	420	○	○
0.38	600	480	○	○
0.51	750	550	○	○
0.65	900	620	○	○
0.70	1000	660	○	○
0.75	1050	680	○	●
0.78	1100	700	○	●
0.91	1200	740	●	▲
1.00	1300	800	▲	■
GRADING BUCKETS				
0.59	1500	440*	○	○
0.72	1800	510*	○	○
0.85	2100	570*	○	●
DITCH CLEANING BUCKETS				
0.86	1830	630*	○	●
90° TILT DITCH CLEANING BUCKETS**				
0.46	1500	650*	○	○
0.55	1800	700*	○	○
0.61	2000	740*	○	●
0.68	2200	810*	●	■
0.74	2400	840*	■	—

CX180E - Quick coupled

Capacity m³ (ISO7451 HEAPED)	Width mm	Weight kg	Arm 2.62 m	Arm 3.05 m
GENERAL PURPOSE BUCKETS				
0.24	450	350	○	○
0.36	600	390	○	○
0.50	750	440	○	○
0.62	900	480	○	○
0.70	1000	500	○	●
0.78	1100	540	●	▲
0.87	1200	570	▲	■
1.00	1350	630	■	—
HEAVY DUTY BUCKETS				
0.26	450	420	○	○
0.38	600	480	○	○
0.51	750	550	○	○
0.65	900	620	○	○
0.70	1000	660	○	●
0.75	1050	680	●	●
0.78	1100	700	●	■
0.91	1200	740	■	—
GRADING BUCKETS				
0.59	1500	440*	○	○
0.72	1800	510*	○	●
0.80	2100	570*	●	●
DITCH CLEANING BUCKETS				
0.86	1830	630*	●	▲

* with bolt-on cutting edge
**Tilt angle 45° L/R Connect to Low-Flow Auxiliary Hydraulic Circuit

○ Rated material density up to 2 ton/m³
● Rated material density up to 1.6 ton/m³
▲ Rated material density up to 1.4 ton/m³
■ Rated material density up to 1.2 ton/m³
— Not applicable

EXPERTS FOR THE REAL WORLD
SINCE 1842

CASE CONSTRUCTION

BUILDING A STRONG CASE.

Since 1842, at CASE Construction Equipment we have lived by an unwavering commitment to build practical, intuitive solutions that deliver both efficiency and productivity.

We continually strive to make it easier for our customers to implement emerging technologies and new compliance mandates.

Today, our global scale combined with our local expertise enables us to keep customers' real-world challenges at the center of our product development.

The vast CASE dealers' network is always ready to support and protect your investment and exceed your expectations, while also providing you with the ultimate ownership experience.

Our goal is to build both stronger machines-and stronger communities. At the end of the day, we do what's right for our customers and our communities so that they can count on CASE.

CNH Industrial
Deutschland GmbH
Case Baumaschinen
Benzstr. 1-3 - D-74076 Heilbronn
DEUTSCHLAND

CNH Industrial
Maquinaria Spain, S.A.
Avenida Aragón 402
28022 Madrid - ESPAÑA

CNH Industrial France, S.A.
16-18 Rue des Rochettes
91150 Morigny-Champigny
FRANCE

CNH Industrial Italia Spa
Lungo Stura Lazio 19
10156, Torino
ITALIA

CASE Construction Equipment
Cranes Farm Rd
Basildon - SS14 3AD
UNITED KINGDOM

NOTE: Standard and optional fittings can vary according to the demands and specific regulations of each country. The illustrations may include optional rather than standard fittings - consult your Case dealer. Furthermore, CNH Industrial reserves the right to modify machine specifications without incurring any obligation relating to such changes.

Conforms to directive 2006/42/EC

CASECE.COM
00800-2273-7373

The call is free from a land line.
Check in advance with your Mobile Operator if you will be charged. Toll free number not available from all calling areas.

Form No. 20269GB - MediaCross Firenze - 01/25