CASE CONSTRUCTION

SR210B

SKID STEER LOADER

TIER 4 FINAL CERTIFIED

ENGINE

Model	F5HFL463A*G032
Emissions Certification	Tier 4 Final
Type	Diesel 4-stroke, Turbo, D.I.
Cylinders	4
Bore/Stroke	3.9 × 4.3 in (99 × 110 mm)
Displacement	207 in³ (3.4 L)
Fuel injection	Direct, high pressure common rail – HPCR
Fuel	#2 Diesel
Fuel filter:	
Pre-filter	Beta (30) = 200/spin-on
Main filter	Beta (4) = 20/spin-on
Air intake	Turbocharged w/ waste gate and external cooled EGR
Exhaust aftertreatment	Diesel Oxidation Catalyst – DOC
Cooling	Liquid
Engine speeds	RPM
High idle – no load	2,500 +/- 25
Rated – full load	2,500
Low idle	1,150 +/- 25
Horsepower @ 2,500 RPM – SAE J1349:	
Gross	74 hp (55 kW)
Net	68 hp (51 kW)
Peak torque @ 1,400 RPM	232 lb·ft (314 N·m)
Radiator:	
Core type	All aluminum
Core size area	2.77 ft² (0.257 m²)
Rows of tubes × columns	43 × 3
Cap pressure	16 +/- 2 psi (1.10 +/- 0.14 bar)
Fan:	
Diameter	20.4 in (518 mm)
Ratio	0.96:1 standard, 1.1:1 high-flow
Water pump:	
Style	Centrifugal
Flow	29 gpm (110 L/min)
Engine lubrication pump	Rotor pump w/ deep sump pan, plate cooler and pressurized under-piston nozzles
Pump operating angle ratings:	
Side to side	45°
Bucket up	35°
Bucket down	45°

LIFT GEOMETRY

Radial lift

DRIVETRAIN

Drive pump controls	Direct mechanical
Pump to engine ratio	1:1
Displacement	2.81 in³ (46 cm³)
Flow @ rated engine RPM:	
@ 97% efficiency	29.4 gpm (111 L/min)
Charge pressure	360 psi (24.5 bar)
System relief pressure	5,220 psi (360 bar)
Drive pump controls	Electro-hydraulic
Pump to engine ratio	1:1
Displacement	2.75 in³ (45 cm³)
Flow @ rated engine RPM:	
@ 97% efficiency	28.8 gpm (109 L/min)
Charge pressure	362 psi (24.5 bar)
System relief pressure	5,220 psi (360 bar)
Drive motors:	
Max. displacement	28.7 in³ (470 cm³)
Displacement:	
High speed	17.2 in³ (282 cm³)
Motor RPM @ high idle and 97% efficiency:	
2-speed	355
Motor torque @ max. displacement and relief pressure, calculated @ 5,220 psi (360 bar):	1,987 lb·ft (2 694 N·m)
Travel speed:	
Low range	7.1 mph (11.4 kph)
High range	10.5 mph (16.9 kph)
Final drive	Single-reduction chain drive
Drive chain:	
Size	ASA #100
Tensile strength	30,000 lb (133.4 kN)
Axles:	
Torque @ max. displacement and relief pressure	5,957 lb·ft (8 077 N·m)
Diameter	2.44 in (61.9 mm)
Length	15.7 in (399 mm)
Parking brake:	
Type	Spring-applied, hydraulic release multiple disc.
Engagement	Depress on/off brake button on handle or instrument panel, raise seat bar, get off seat or stop engine.

ELECTRICAL

Alternator	120 amp
Starter	4.29 hp (3.2 kW)
Battery	12-volt low-maintenance 1,000 cold-cranking amps @ 0° F (-18° C°)

OPERATOR ENVIRONMENT

ROPS/FOPS Level 1 canopy w/ side screens; Keyed start ignition; Tilt ROPS/FOPS; Rear window w/ emergency escape; Suspension seat, vinyl w/ 2 in (51 mm) retractable 3 point lap seat belt; Hand and foot throttle; Alarm package – back-up and horn; Rearview mirror; Headliner; Dome light; Top window; Cup holder; 12V Power plug socket; Foot rest; Seat pocket; Padded seat bar w/ integral armrests; Loader control lockout system; Electric parking brake control; Operator's compartment floor cleanout; Proportional auxiliary hydraulic control – on joystick; Advanced instrument cluster w/ digital hour meter, tachometer, fuel level LCD bar graph w/ alarm, diagnostic features and security lockout.

Warning lights w/ alarms:
Engine coolant temperature; Engine oil pressure; Engine malfunction; Hydraulic charge pressure; Hydraulic filter restriction; Hydraulic oil temperature: Critical system stop, Engine system, Hydraulic system, Electrical and diagnostic system.

Warning alarms:
Battery voltage – plus display; Oil service.

Indicator light:
Engine preheat; Parking brake; Seat bar reminder.

OPERATING WEIGHT

Unit equipped w/ open cab; 165 lb operator; 72 in Dirt and Foundry bucket; full of fuel; 12 × 16.5 tires:	6,970 lb (3 160 kg)
Shipping weight	6,670 lb (3 025 kg)
Add-on weights:	
Side cab glass	47 lb (21.3 kg)
Polycarbonate cab door	74 lb (33.6 kg)
Glass cab door w/ wiper	134 lb (60.8 kg)
Suspension seat	22 lb (10 kg)
Additional counterweight	140 lb (63.8 kg)

HYDRAULICS

Implement pump type	Gear
Displacement:	
Standard aux.	2.23 in³ (36.6 cm³)
High-flow aux.	.84 in³ (13.8 cm³)
Standard flow @ rated engine RPM:	
@ 100% efficiency	24.2 gpm (91.5 L/min)
Optional high-flow @ rated engine RPM:	
@ 100% efficiency	33.2 gpm (125.7 L/min)
Loader control valve:	
Type	3 spool/open center/series – series
Relief pressure	3,050 psi (210 bar)
Port relief pressures:	
Loader raise	3,263 psi (225 bar)
Bucket curl	3,770 psi (260 bar)
Bucket dump	1,160 psi (80 bar)
Hydraulic lines:	
Tubing	37° JIC Flare
Loop hoses	SAE 100 R19
Hydraulic oil cooler:	
Number of fins	10 per in (3.94 per cm)
Number of tube rows × columns	9 × 1
Area	137.5 in² (890 cm²)
Hydraulic filter	Beta (4) = 75/spin-on

HYDRAULICS CONT.

Lift cylinders:	
Bore diameter	2.5 in (63.5 mm)
Rod diameter	1.75 in (44.5 mm)
Stroke	31.69 in (804.9 mm)
Closed length	45.59 in (1 158 mm)
Bucket cylinders:	
Bore diameter	2.75 in (69.9 mm)
Rod diameter	1.38 in (34.9 mm)
Stroke	16.14 in (410 mm)
Closed length	24.02 in (610 mm)

SERVICE CAPACITIES

Fuel tank	19.5 gal (73.8 L)
Engine oil w/ filter	10 qt (9.4 L)
Hydraulic system:	
Reservoir	7 gal (26.5 L)
Total	8.5 gal (32.2 L)
Chain tanks – per side	6.9 gal (26 L)

PERFORMANCE SPECS

Rated operating capacity – ROC*:	
50% of tipping load	2,100 lb (955 kg)
w/ additional counterweight	2,200 lb (998 kg)
Tipping load*	4,200 lb (1 905 kg)
Breakout forces @ 3,150 psi (217 bar)*:	
Bucket cylinders	7,270 lb (32.3 kN)
Lift cylinders – tip limit	4,570 lb (20.3 kN)
Cycle times:	
Raise	3.6 sec
Lower	1.8 sec
Dump	2.2 sec
Roll back	1.7 sec

NOTE: *Measured using 72 in (1.83 m) foundry/excavating bucket.

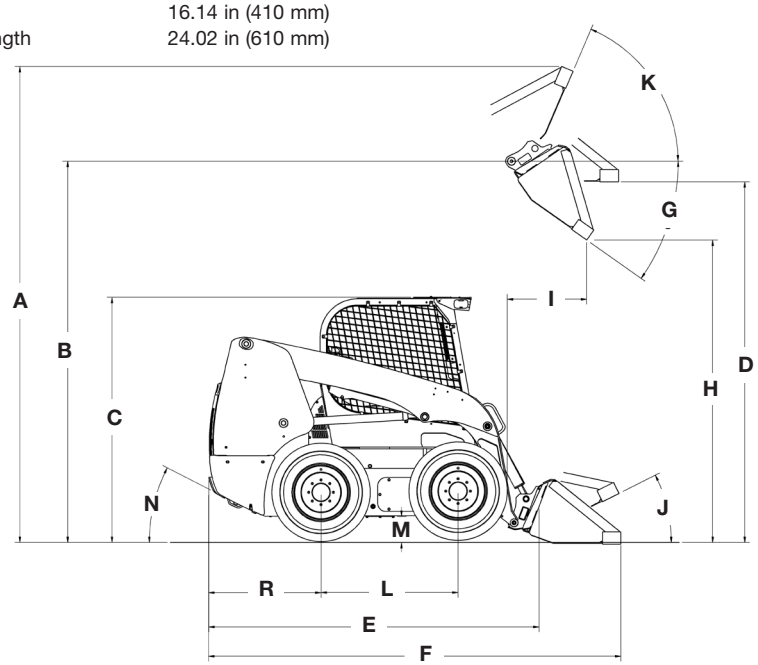

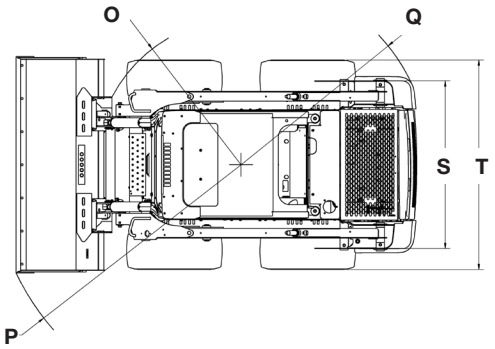

Line drawings are for illustrative purpose only and may not be exact representation of unit.

DIMENSIONS

A. Overall operating height:	
w/ foundry/excavating bucket	154.3 in (3.92 m)
w/ low profile bucket	158.3 in (4.05 m)
w/ low profile extended bucket	163.2 in (4.15 m)
Height to:	
B. Bucket hinge pin	123 in (3.12 m)
C. Top of ROPS	78.7 in (2 m)
D. Bottom of level bucket, fully raised	116.1 in (2.95 m)
Overall length:	
E. w/o attachment w/ coupler	105.1 in (2.67 m)
F. w/ foundry/excavating bucket on ground	129.6 in (3.29 m)
w/ low profile bucket	133.7 in (3.4 m)
w/ low profile extended bucket	138.8 in (3.53 m)
G. Maximum dump angle	39.6°
H. Dump height:	
w/ foundry/excavating bucket	98.2 in (2.5 m) @ 39.6°
w/ low profile bucket	95.6 in (2.43 m) @ 39.6°
I. Dump reach at maximum height w/ low profile bucket	23.4 in (.6 m) @ 39.6°
Maximum attachment rollback:	
J. Bucket on ground	31°
K. Bucket at full height	98.6°
L. Wheelbase	44.4 in (1.13 m)
M. Ground clearance – bottom of belly pan	8 in (.2 m)
N. Angle of departure	25°
Clearance circle:	
O. w/o bucket	51.6 in (1.31 m)
P. w/ 72 in (1.83 m) foundry/excavating bucket in carry position	80.1 in (2.03 m)
w/ 72 in (1.83 m) low profile bucket on ground	83.7 in (2.13 m)
w/ 72 in (1.83 m) extended low profile on ground	88.3 in (2.24 m)
Q. Clearance circle rear	62.9 in (1.6 m)
R. Rear axle to bumper	36.4 in (.92 m)
S. Tread over gauge w/ spec lines	56.9 in (1.45 m)
T. Over the tire width spec tires	69.1 in (1.76 m)

OPTIONAL BUCKETS

Type	Width	Weight	Heaped Capacity
Dirt and Foundry	66 in (1.68 m)	385 lb (175 kg)	14.8 ft^3 (.42 m^3)
	72 in (1.83 m)	420 lb (190 kg)	16.2 ft^3 (.46 m^3)
	78 in (1.98 m)	440 lb (200 kg)	17.7 ft^3 (.5 m^3)
Low Profile	66 in (1.68 m)	440 lb (200 kg)	13.4 ft^3 (.38 m^3)
	72 in (1.83 m)	480 lb (218 kg)	14.8 ft^3 (.42 m^3)
Low Profile Extended	66 in (1.68 m)	470 lb (214 kg)	15.9 ft^3 (.45 m^3)
	72 in (1.83 m)	510 lb (232 kg)	17.7 ft^3 (.5 m^3)
	78 in (1.98 m)	540 lb (245 kg)	19.1 ft^3 (.54 m^3)
	84 in (2.13 m)	575 lb (262 kg)	20.5 ft^3 (.58 m^3)
Light Material	72 in (1.83 m)	475 lb (216 kg)	23.3 ft^3 (.66 m^3)
	84 in (2.13 m)	540 lb (245 kg)	27.5 ft^3 (.78 m^3)
Manure and Slurry	72 in (1.83 m)	480 lb (218 kg)	19.1 ft^3 (.54 m^3)
Heavy-Duty	72 in (1.83 m)	510 lb (230 kg)	14.1 ft^3 (.4 m^3)
	78 in (1.98 m)	530 lb (240 kg)	15.5 ft^3 (.44 m^3)
Heavy-Duty Extended w/ SmartFit™ Bucket Teeth	72 in (1.83 m)	667 lb (303 kg)	17.4 ft^3 (.49 m^3)
	78 in (1.98 m)	697 lb (316 kg)	18.9 ft^3 (.54 m^3)

STANDARD EQUIPMENT

OPERATOR ENVIRONMENT

See page 1

ENGINE

F5HFL463A*G032
207 CID (3.4 L) Turbo
Tier 4 Final Certified
High Pressure Common Rail (HPCR) fuel injection
Horsepower:
- Gross: 74 hp (55 kW)
- Net: 68 hp (51 kW)
- Peak torque: 232 lb·ft (314 N·m)

120 amp alternator
Dual element air cleaner
Organic Acid Technology (OAT)
Anti-freeze solution to -34° F
Fuel tank – 19.5 gal (U.S.)
Over and under radiator and oil cooler
3-stack after cooler/radiator/oil cooler configuration
Glow plugs
Integral engine oil cooler
Fuel filter w/ water trap
1,000 CCA 12V battery
Master electrical disconnect

DRIVETRAIN

2-speed hydrostatic four wheel drive
ASA #100HS drive chain
SAHR disc parking brake

HYDRAULICS

Auxiliary hydraulics:
- @ 3,050 psi (210 bar) – 24.2 gpm (91.5 L/min)

6 micron oil filtration system
3-spool loader control valve
Auxiliary hydraulic disconnects, ISO flat-face – connect-under-pressure w/ case drain
Hydraulic circuit pedal lock
Auxiliary function lockout override
Loader lift lockout override
Heavy-duty hydraulic oil cooler
Loader arm float position
Loader function lockout system

LOADER

Auxiliary front electric control
Manual attachment coupler
Radial lift geometry
Loader lift arm support strut

TIRES

12 × 16.5 Heavy duty

OTHER STANDARD FEATURES

LED lights – 2 front, 2 side, 2 rear flood
Pre-wired for rotating beacon
Lockable service access hood
Single-point daily servicing
Rear tail lights
Remote oil and fuel filters
Block heater
Debris ingression sealing
Mounting points for add-on counterweights

TELEMATICS

MyCASEConstruction Telematics – Includes hardware and 7-Year data subscription
SiteConnect Module providing remote diagnostics capability

OPTIONAL EQUIPMENT

OPERATOR ENVIRONMENT

Enclosed cab:
- Fully sealed and pressurized – FSP
- Glass door w/ wiper and washer
- Sliding side windows – removable
- Heater and air conditioner
- AM/FM Bluetooth® radio w/ 2 speakers
- Keyless start ignition

8 in Color LCD display
Economy mode (auto idle shutdown)
Auto engine protection shutdown
Electro-hydraulic controls:
- For drive/steering, loader functions
- Switchable between H and ISO patterns
- Adjustable sensitivity of controls

Mechanical hand controls
Hand and foot controls:
- Hand controls the loader drive function and foot controls the bucket and boom

Deluxe cloth, air suspension seat, w/ heater and lumbar support
Demolition cab door w/ polycarbonate
Ignition timeout
Machine settings user access levels
Operator security codes
Auto idle setting

HYDRAULICS

High-flow auxiliary hydraulics – combined:
- @ 3,050 psi (210 bar) – 33.2 gpm (125.7 L/min)

Second auxiliary hydraulics
Hydraulic one-way self-leveling
Ride control

LOADER

Hydraulic attachment coupler

DRIVETRAIN

Creep Speed Mode (for EH machines only)

OTHER

Language decals
Buckets – see page 3
Bolt-on bucket cutting edges
Special paint
Offsite service arrangement

FACTORY SUPPLIED ATTACHMENTS

Add-on counterweights
Road lights
Rotating beacon
Four-corner LED strobe

SERVICE PARTS

3 in (76.2 mm) retractable seat belt
Bolt-on heavy-duty bucket teeth

CaseCE.com

©2026 CNH Industrial America LLC. All rights reserved. CASE is a trademark registered in the United States and many other countries, owned by or licensed to CNH Industrial N.V., its subsidiaries or affiliates. CNH Industrial Capital is a trademark in the United States and many other countries, owned by or licensed to CNH Industrial N.V., its subsidiaries or affiliates. Printed in U.S.A. Contains 10% post-consumer fiber.

IMPORTANT: CASE Construction Equipment Inc. reserves the right to change these specifications without notice and without incurring any obligation relating to such change. Availability of some models and equipment builds vary according to the country in which the equipment is used. The illustrations and text may include optional equipment and accessories and may not include all standard equipment. Your CASE dealer/distributor will be able to give you details of the products and their specifications available in your area.

Biodiesel Ready — CASE Construction Equipment is biodiesel-friendly. NOTE: All engines meet current EPA emissions regulations. All specifications are stated in accordance with SAE Standards or Recommended Practices, where applicable.

SAFETY™ NEVER HURTS — Always read the Operator's Manual before operating any equipment. Inspect equipment before using it, and be sure it is operating properly. Follow the product safety signs and use any safety features provided.

Form No. CCE202605SR210B
Replaces Form No. CCE202310SR210B